ABN : 99 010 671 048
ACN : 010 671 048
E-Mail : info@terex.com.au
Internet : www.terex.com.au

TEREX | FRANNA

Terex Lifting Australia Pty. Ltd.

RATED CAPACITY MANUAL
MODEL AT-18

HYDRAULIC ALL TERRAIN PICK & CARRY CRANE

18 TONNE MAXIMUM CAPACITY

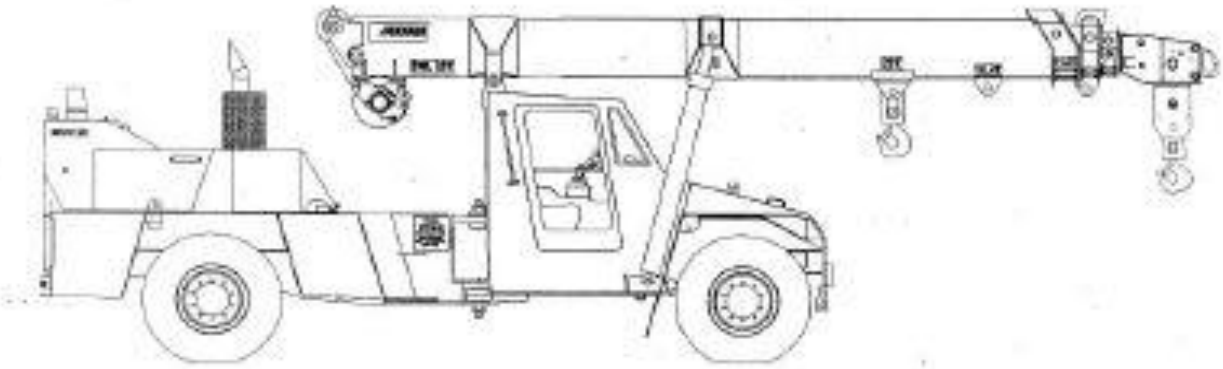

Do not operate this crane unless you have read and understood the information in this book.

16C1320-/0-1
Revision B – 24 August 2006

BOOM ANGLE	BOOM PIVOT TO HEAD SHEAVES – MANUAL EXTENSION RETRACTED.																		MAN. EXT.	FLY JIB	
																				0°	12.5°
	5.67	6.00	6.50	7.00	7.50	8.00	8.50	9.00	9.50	10.00	10.50	11.00	11.50	12.00	12.50	13.00	13.50	13.85	17.90	20.83	20.76
60°			12600	12600	12600	12600	12600	12600	11850	11200	10600	8950	7800	7200	6700	6250	5800	5550	2550	1500	1300
			12600	12600	12600	12600	12600	12600	11850	10700	9750	8950	7800	7200	6700	6250	5800	5550	2550	1500	1300
			1.04	1.29	1.54	1.79	2.04	2.29	2.54	2.79	3.04	3.29	3.54	3.79	4.04	4.29	4.54	4.72	6.74	8.25	8.73
50°	12600	12600	12600	12600	12600	11150	9950	9000	8200	7500	6900	6400	5950	5550	5200	4850	4600	4400	2250	1200	1120
	12600	12600	12600	12600	11500	10150	9050	8150	7400	6800	6250	5750	5350	5000	4650	4350	4100	3950	2250	1200	1120
	1.45	1.66	1.98	2.30	2.62	2.95	3.27	3.59	3.91	4.23	4.55	4.87	5.20	5.52	5.84	6.16	6.48	6.71	9.31	11.22	11.64
40°	12600	12600	11800	10300	9100	8100	7300	6650	6100	5600	5150	4800	4450	4150	3900	3650	3450	3300	2050	970	920
	12600	12600	10750	9350	8250	7350	6600	6000	5500	5050	4650	4300	4000	3750	3500	3300	3100	2950	2050	970	920
	2.16	2.42	2.80	3.18	3.56	3.95	4.33	4.71	5.10	5.48	5.86	6.25	6.63	7.01	7.39	7.78	8.16	8.43	11.53	13.79	14.13
30°	12050	10850	9350	8250	7300	6550	5950	5400	4950	4600	4250	3950	3650	3400	3200	3000	2850	2700	1900	850	820
	10950	9850	8500	7450	6600	5950	5350	4900	4450	4100	3800	3500	3250	3050	2850	2700	2500	2400	1700	850	820
	2.75	3.03	3.47	3.90	4.33	4.77	5.20	5.63	6.07	6.50	6.93	7.36	7.80	8.23	8.66	9.10	9.53	9.83	13.34	15.88	16.14
20°	10300	9300	8100	7150	6350	5700	5200	4750	4350	4000	3700	3450	3200	3000	2800	2650	2450	2350	1700	770	770
	9350	8400	7300	6450	5750	5150	4650	4250	3900	3600	3300	3050	2850	2650	2500	2350	2200	2100	1500	770	770
	3.19	3.50	3.97	4.44	4.91	5.38	5.85	6.32	6.79	7.26	7.73	8.20	8.67	9.13	9.60	10.07	10.54	10.87	14.68	17.43	17.59
10°	9400	8500	7400	6550	5850	5300	4800	4350	4000	3700	3400	3200	2950	2750	2600	2400	2300	2200	1550	750	750
	8500	7700	6700	5900	5300	4750	4300	3950	3600	3300	3050	2850	2650	2450	2300	2150	2000	1900	1350	750	750
	3.46	3.79	4.28	4.77	5.27	5.76	6.25	6.74	7.24	7.73	8.22	8.71	9.21	9.70	10.19	10.68	11.18	11.52	15.51	18.39	18.45
0°	9050	8200	7150	6350	5700	5100	4650	4250	3900	3600	3350	3100	2850	2700	2500	2350	2200	2100	1500	750	750
	8200	7450	6500	5750	5100	4600	4200	3800	3500	3200	2950	2750	2550	2400	2200	2100	1950	1850	1300	750	750
	3.57	3.90	4.40	4.90	5.40	5.90	6.40	6.90	7.40	7.90	8.40	8.90	9.40	9.90	10.40	10.90	11.40	11.75	15.80	18.73	18.69

S.W.L. above red line is structural
S.W.L below red line is stability

BOOM ANGLE	18T LUG
	3.36
60°	
50°	
40°	
30°	18000
	18000
	0.86
20°	18000
	18000
	1.09
10°	18000
	18000
	1.23
0°	18000
	18000
	1.26

BOOM ANGLE	BOOM PIVOT TO INNER LUG, 1st EXTENSION MANUAL EXTENSION RETRACTED.									
	4.16	4.50	5.00	5.50	6.00	6.50	7.00	7.50	8.00	8.25
60°						16000	15150	14000	13000	12550
						16000	15150	14000	13000	12550
						1.22	1.47	1.72	1.97	2.09
50°			16000	16000	15900	14550	12600	10950	9600	9050
			16000	16000	15900	13350	11350	9850	8650	8150
			1.17	1.49	1.81	2.14	2.46	2.78	3.10	3.25
40°	16000	16000	16000	14700	12250	10400	9000	7850	6950	6550
	16000	16000	16000	13300	11050	9350	8050	7050	6200	5850
	1.13	1.40	1.78	2.16	2.55	2.93	3.31	3.69	4.08	4.27
30°	16000	16000	14050	11500	9650	8300	7200	6300	5600	5300
	16000	16000	12700	10400	8700	7450	6450	5650	4950	4700
	1.54	1.84	2.27	2.70	3.14	3.57	4.00	4.43	4.87	5.09
20°	16000	14950	11950	9850	8300	7150	6200	5450	4850	4550
	16000	13550	10800	8900	7450	6400	5550	4850	4250	4050
	1.83	2.16	2.63	3.10	3.57	4.04	4.51	4.98	5.45	5.68
10°	16000	13600	10950	9050	7650	6550	5700	5000	4450	4200
	14700	12300	9850	8150	6850	5850	5100	4450	3900	3700
	2.01	2.35	2.84	3.33	3.82	4.32	4.81	5.30	5.79	6.04
0°	15750	13200	10650	8800	7450	6400	5550	4900	4300	4050
	14250	11950	9600	7900	6650	5700	4950	4300	3800	3600
	2.06	2.40	2.90	3.40	3.90	4.40	4.90	5.40	5.90	6.15

BOOM ANGLE	OUTER LUG, 1st EXTENSION. MANUAL EXT. RETRACTED READ OFF INNER LUG INDICATOR SCALE (RED)									
	4.16	4.50	5.00	5.50	6.00	6.50	7.00	7.50	8.00	8.25
60°				16000	16000	15300	14150	13100	11950	11200
				16000	16000	15300	14150	13100	11950	11200
				1.12	1.37	1.62	1.87	2.12	2.37	2.49
50°	16000	16000	16000	16000	13750	11900	10400	9200	8250	7800
	16000	16000	16000	14750	12450	10750	9400	8300	7400	7000
	1.14	1.37	1.69	2.01	2.33	2.65	2.97	3.30	3.62	3.77
40°	16000	16000	13550	11450	9850	8600	7550	6750	6050	5750
	16000	15000	12300	10350	8900	7750	6800	6050	5400	5100
	1.74	2.01	2.39	2.78	3.16	3.54	3.93	4.31	4.69	4.88
30°	14900	12900	10750	9150	7900	6900	6100	5450	4900	4650
	13550	11700	9700	8250	7100	6200	5450	4850	4350	4100
	2.23	2.53	2.96	3.40	3.83	4.26	4.70	5.13	5.56	5.77
20°	12700	11050	9300	7900	6850	6000	5300	4750	4250	4000
	11550	10000	8400	7150	6150	5400	4750	4200	3750	3550
	2.58	2.91	3.38	3.85	4.32	4.79	5.26	5.73	6.20	6.43
10°	11650	10150	8550	7300	6350	5550	4900	4350	3900	3700
	10550	9200	7700	6600	5700	4950	4350	3850	3450	3250
	2.79	3.14	3.63	4.12	4.61	5.11	5.60	6.09	6.58	6.82
0°	11350	9900	8350	7100	6150	5400	4800	4250	3800	3600
	10300	8950	7500	6400	5550	4850	4250	3750	3350	3150
	2.85	3.20	3.70	4.20	4.70	5.20	5.70	6.20	6.70	6.95

WINCH SAFE WORKING LOADS	
SINGLE PART	4200 KG
TWO PARTS	8400 KG
THREE PARTS	12600 KG

RHINO HOOK MAX SWL 10000 KG
MANBASKET SWL 275 KG

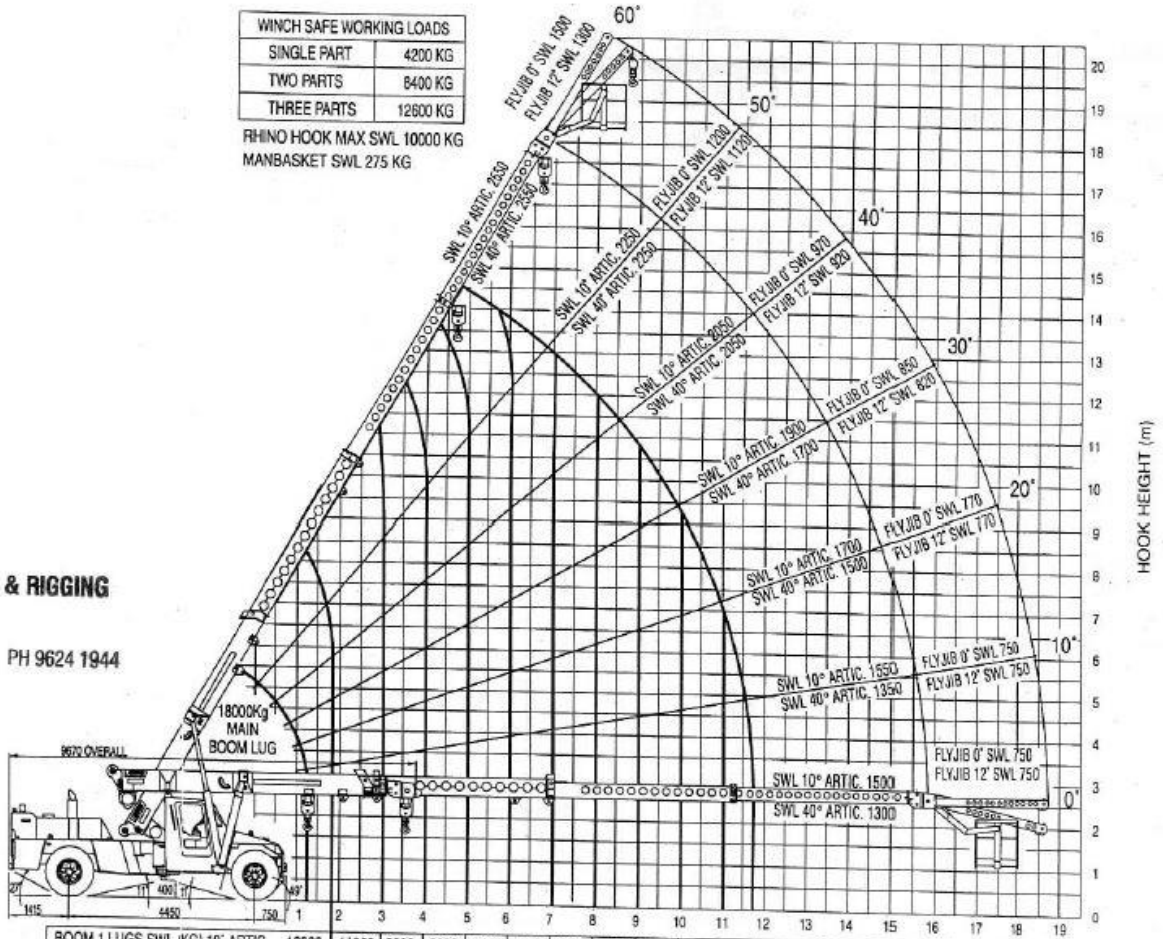

MELROSE CRANES & RIGGING
PO BOX 299
WINSTON HILLS 2153
ABN 73 083 164 845 PH 9624 1944

BOOM 1 LUGS SWL (KG) 10° ARTIC.	16000	11000	8000	6200	5000	4200	3500	3000	2650	2300	2100	WINCH SWL (KG) 10° ARTIC.
BOOM 1 LUGS SWL (KG) 40° ARTIC.	16000	10000	7250	5600	4500	3750	3150	2700	2350	2050	1850	WINCH SWL (KG) 40° ARTIC.

1.8 Metres

NOTE: 1. UNLESS OTHERWISE STATED ALL SWL'S REFER TO LIFTING ON THE WINCH, FOR LIFTING LUG CAPACITIES PLEASE REFER TO THE SPECIFIC LOADCHART.
2. THIS RADIUS CHART IS A SUMMARY OF LOADCHART 16C1204-, REFER TO THE CRANE'S LOADCHART BEFORE ATTEMPTING A LIFT.

FRANNA CRANES AXLE LOADS SUMMARY

Note: SWL's are indicative only.Always consult the load chart fitted to the crane before lifting
Axle loads are approximate.Specific cranes may vary slightly depending on equipment.

AT-18

FRONT AXLE WEIGHTS (tonne)

RADIUS		1.3 m	2 m	3.6 m	4 m	5 m	7 m	10 m	11.8 m	15.8 m
SWL (tonne)		18	15.7	9	8	6.2	4.2	2.6	2.1	1.5
LIFTED LOAD (tonne)	1	12.3	9.8	9.8	10.0	10.6	11.6	13.4	14.3	15.5
	2	13.6	11.2	11.6	11.9	12.7	14.2	16.7	17.9	
	3	14.9	12.7	13.4	13.8	14.9	16.8			
	4	16.2	14.1	15.3	15.8	11.0	19.4			
	5	17.5	15.6	17.1	17.7	19.1				
	10	24.0	22.9							
	15	30.5	30.1							
	18	34.4								

REAR AXLE WEIGHTS (tonne)

RADIUS		1.3 m	2 m	3.6 m	4 m	5 m	7 m	10 m	11.8 m	15.8 m
SWL (tonne)		18	15.7	9	8	6.2	4.2	2.6	2.1	1.5
LIFTED LOAD (tonne)	1	7.7	10.2	10.2	10.0	9.4	8.4	6.6	5.7	4.5
	2	7.4	9.8	9.4	9.1	8.3	6.8	4.3	3.1	
	3	7.1	9.3	8.6	8.2	7.1	5.2			
	4	6.8	8.9	7.7	7.2	6.0	3.6			
	5	6.5	8.4	6.9	6.3	4.9				
	10	5.0	6.1							
	15	3.5	3.9							
	18	2.7								

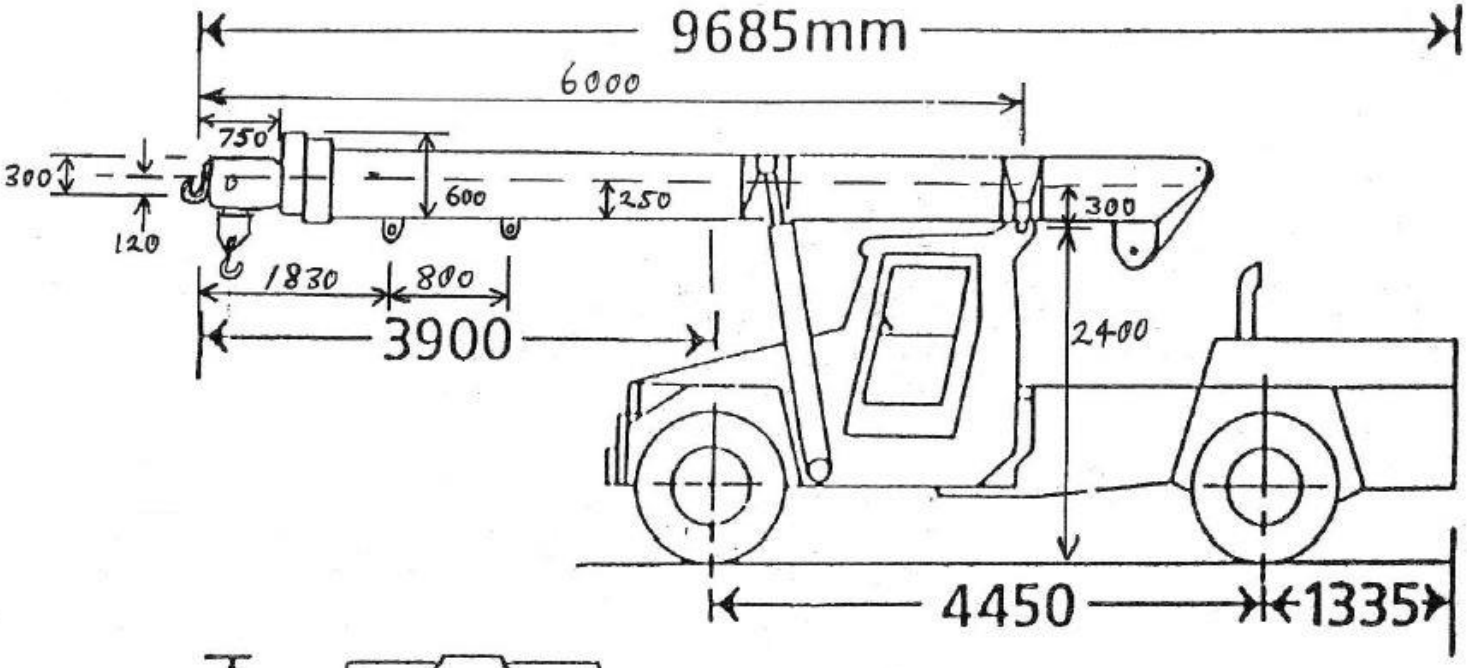
9685mm
6000
750
300
120
600
250
300
1830
800
3900
2400
4450
1335

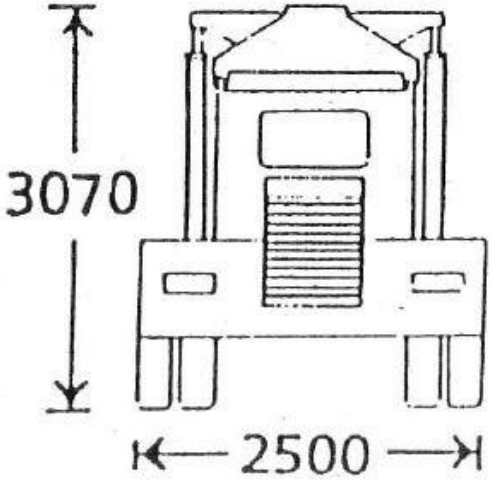
3070
2500

Dimensions